GESSI

17159

validity date
≥ 04/2016



GPF1715900000G000

MONACO

Single-lever swivel sink mixer.

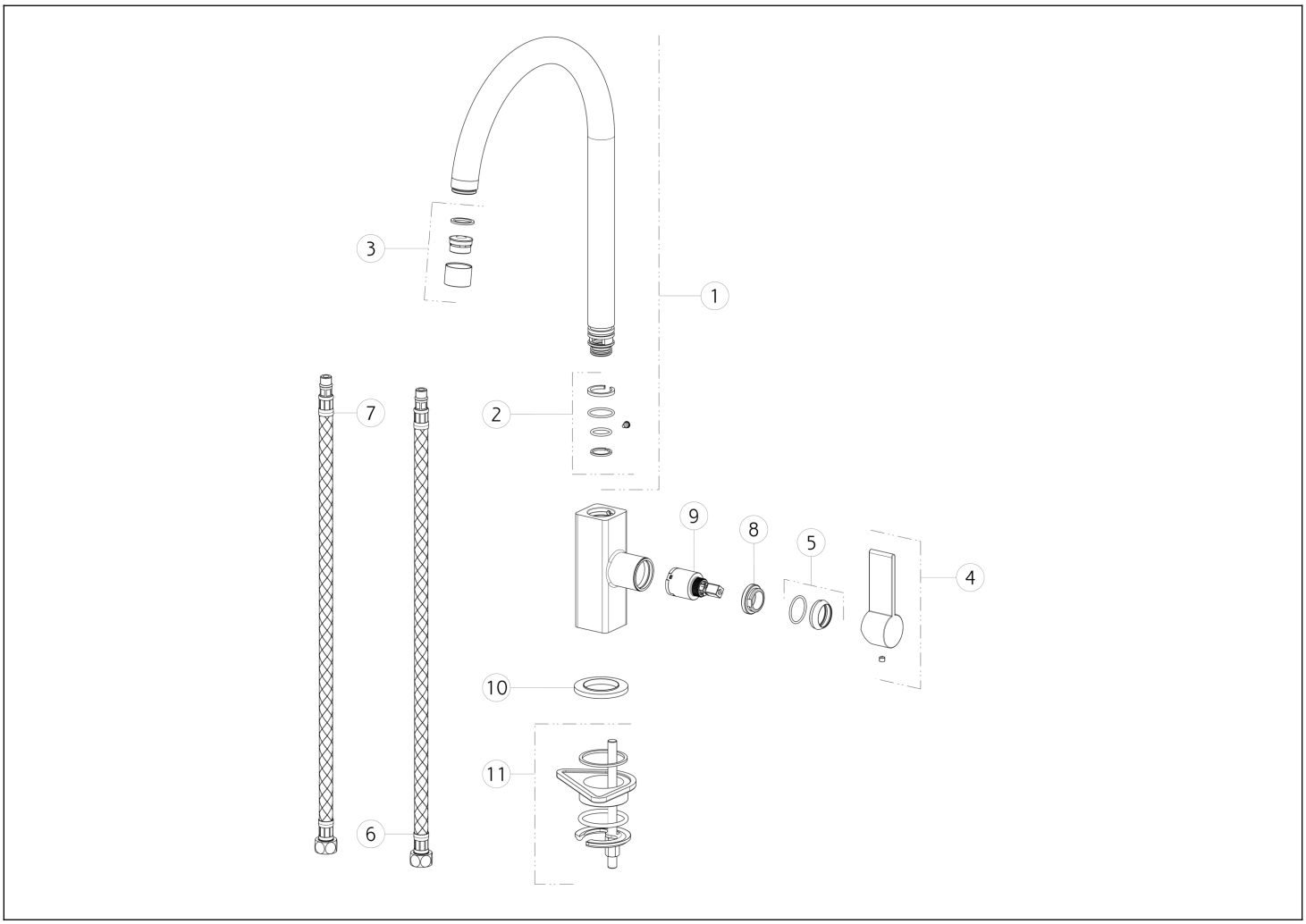

N°	Code	Description
1	SP00729	SWIVELING SPOUT
2	SP00603	GASKETS AND ANTI-FRICTION RINGS
3	SP00597	AERATOR
4	SP00724	HANDLE
5	SP00643	FINISHING RING NUT
6	SP00646	RED SUPPLY HOSE

N°	Code	Description
7	SP00648	BLU SUPPLY HOSE
8	SP00651	FIXING RING NUT
9	SP00638	CARTRIDGE
10	SP00390	BASE
11	SP00649	FIXING SET

Gessi S.p.A. Parco Gessi, 13037 Serravalle Sesia (Vercelli) Italy Tel. +39 0163 454111 Fax. +39 0163 453150 - www.gessi.com - gessi@gessi.it This drawing, as required by law, may not be made public or reproduced without the written authorization of GESSI S.p.A. Copyright GESSI S.p.A.