GESSI

60024

GPF6002400000G000

GESSI 316

validity date
≥ 11/2021



Single-lever sink mixer with pull-out dual-jet handshower. MECCANICA.

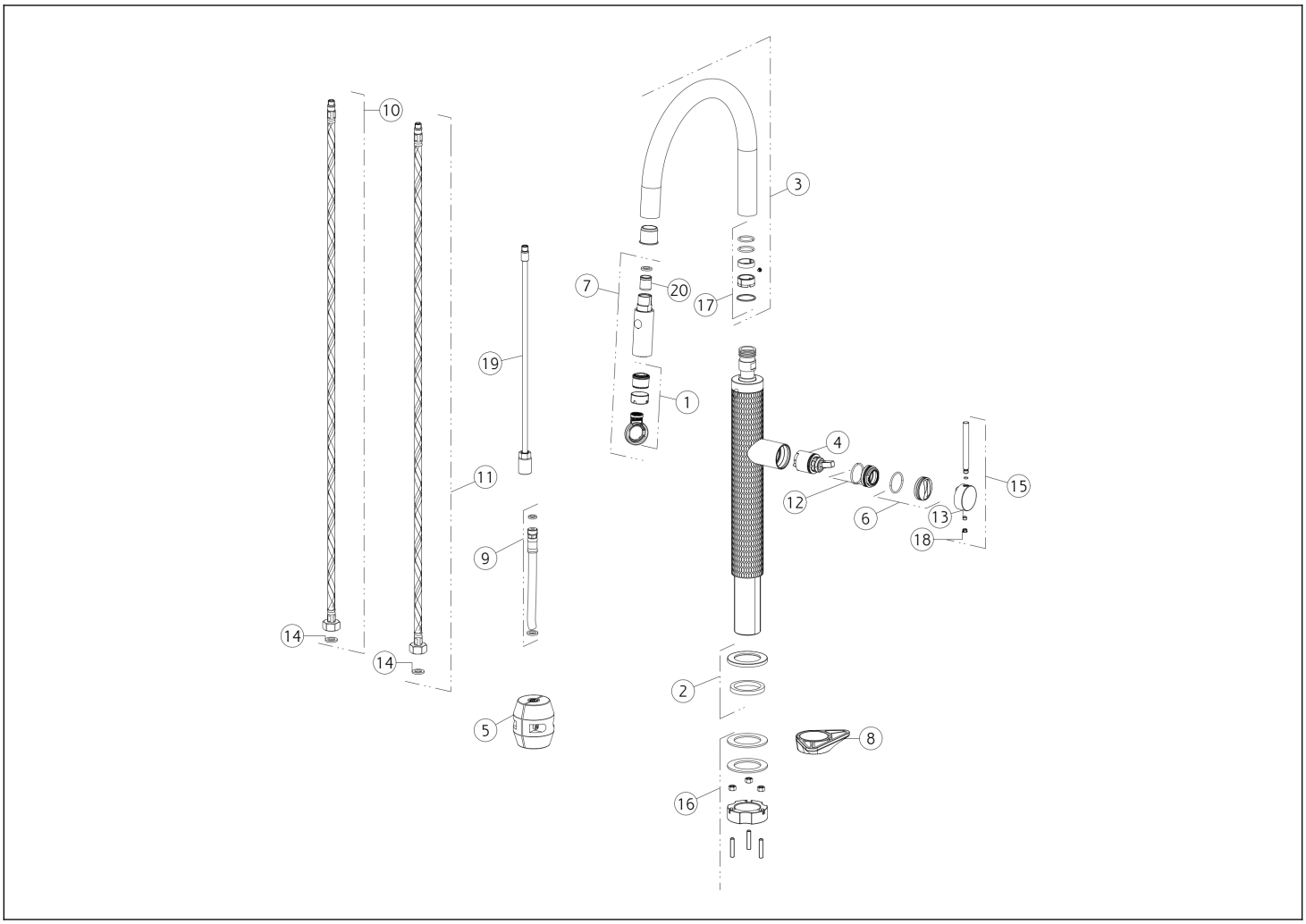

N°	Code	Description
1	SP00337	AERATOR
2	SP01702	BASE
3	SP03598	COMPLETE SPOUT
4	SP02288	CARTRIDGE
5	SP00680	COUNTERWEIGHT
6	SP01786	FINISHING RING NUT
7	SP03596	HANDSHOWER
8	SP00329	TRIANGULAR FLANGE
9	SP03532	HOSE
10	SP01286	BLU SUPPLY HOSE

N°	Code	Description
11	SP01287	RED SUPPLY HOSE
12	SP01278	FIXING RING NUT
13	SP00137	SCREW
14	SP00064	GASKET
15	SP01785	HANDLE
16	SP01703	FIXING SET
17	SP00906	GASKETS AND ANTI-FRICTION RINGS
18	SP00002	SCREW COVER
19	SP03597	TUBE
20	SP00336	NON RETURN VALVE

Gessi S.p.A. Parco Gessi, 13037 Serravalle Sesia (Vercelli) Italy Tel. +39 0163 454111 Fax. +39 0163 453150 - www.gessi.com - gessi@gessi.it This drawing, as required by law, may not be made public or reproduced without the written authorization of GESSI S.p.A. Copyright GESSI S.p.A.