GESSI

17151

validity date
≥ 04/2016



GPF1715100000G000

PROTON

Single-lever swivel sink mixer.

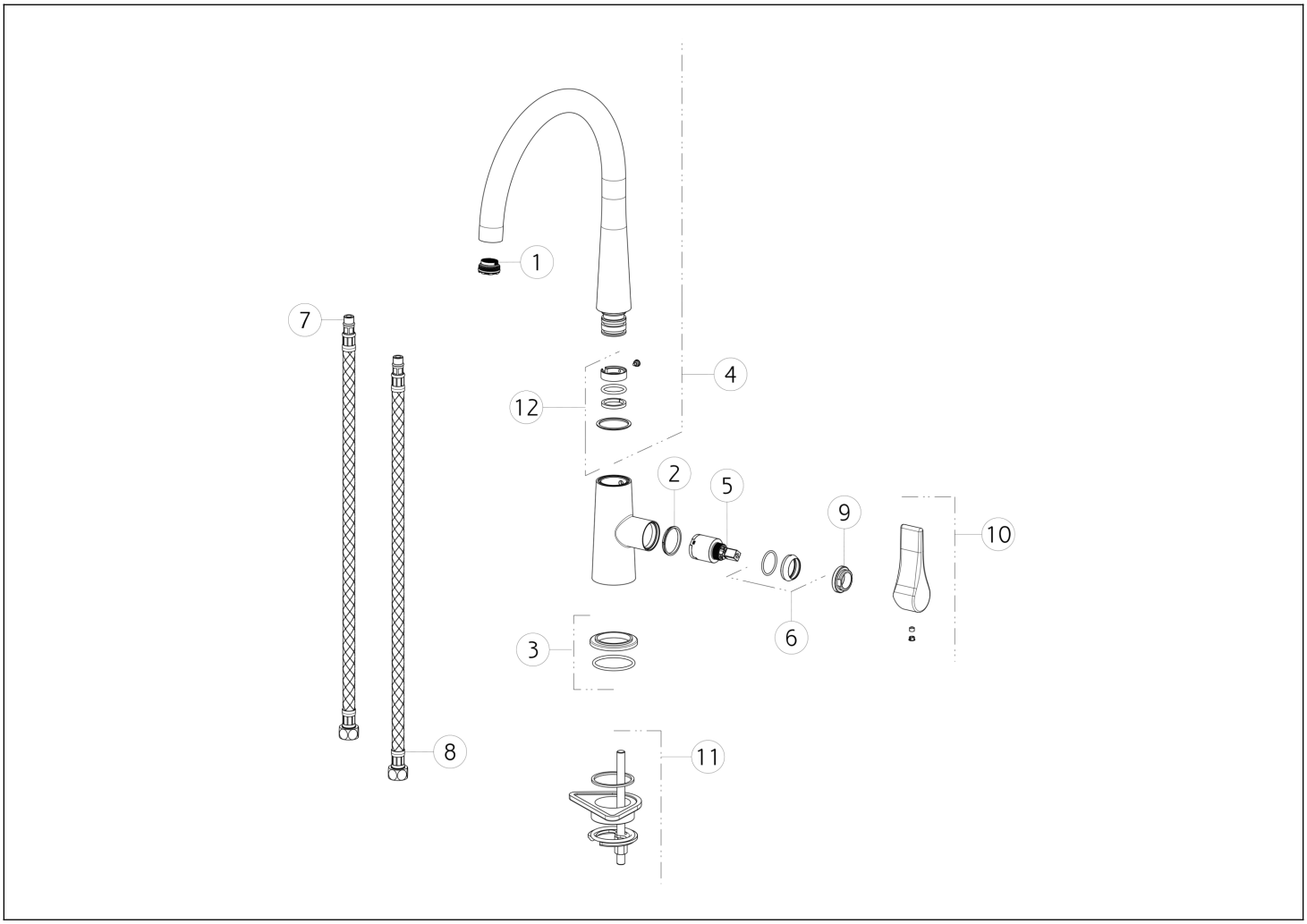

N°	Code	Description
1	SP00499	AERATOR
2	SP00653	INDICATOR RING
3	SP00639	BASE
4	SP00650	COMPLETE SPOUT
5	SP00638	CARTRIDGE
6	SP00643	FINISHING RING NUT

N°	Code	Description
7	SP00648	BLU SUPPLY HOSE
8	SP00646	RED SUPPLY HOSE
9	SP00651	FIXING RING NUT
10	SP00644	HANDLE
11	SP00649	FIXING SET
12	SP02308	GASKETS AND ANTI-FRICTION RINGS

Gessi S.p.A. Parco Gessi, 13037 Serravalle Sesia (Vercelli) Italy Tel. +39 0163 454111 Fax. +39 0163 453150 - www.gessi.com - gessi@gessi.it This drawing, as required by law, may not be made public or reproduced without the written authorization of GESSI S.p.A. Copyright GESSI S.p.A.