GESSI

50105

validity date
≥ 05/2020



GPF50105100000G000

HELIUM

Single-lever swivel sink mixer.

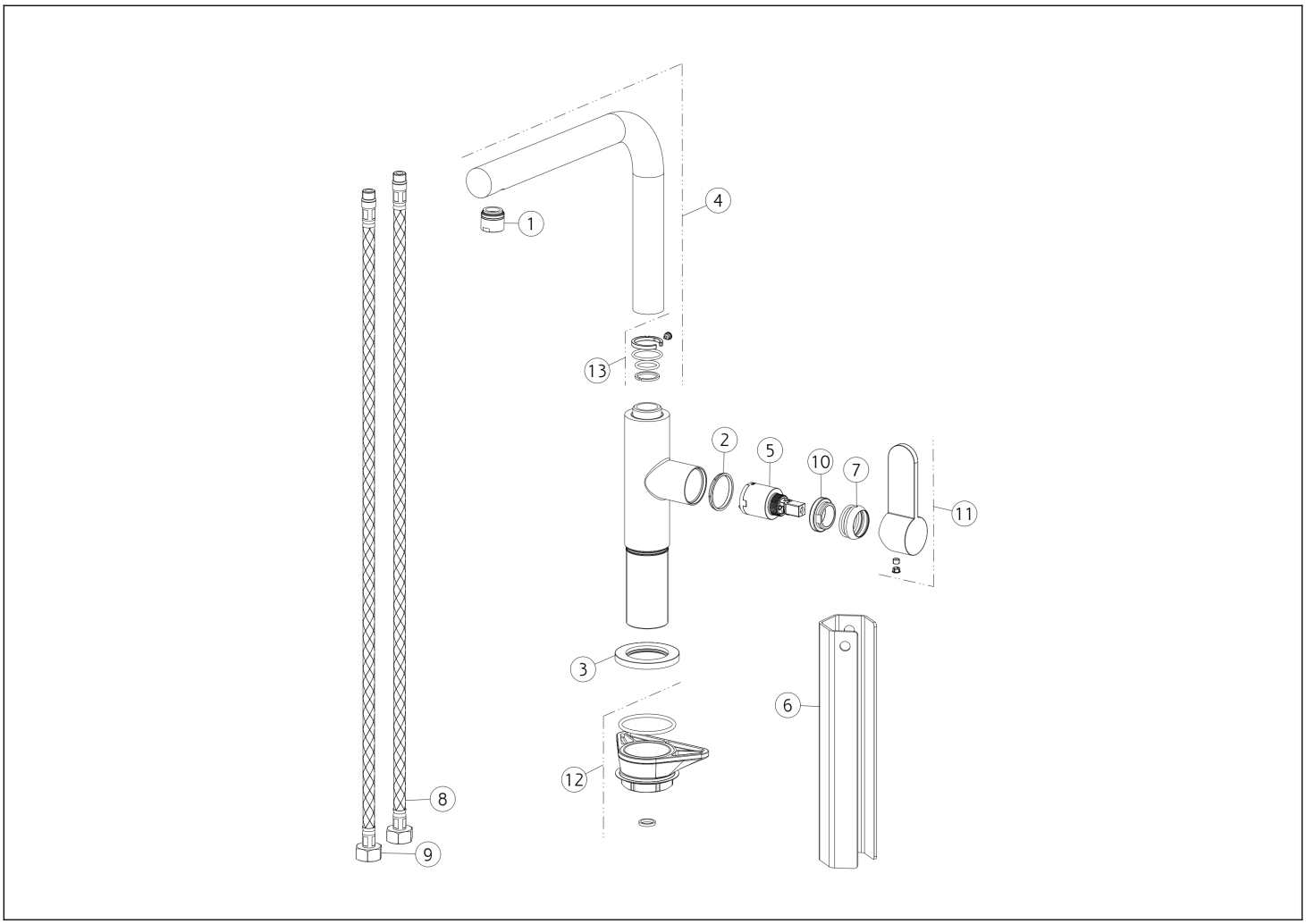

N°	Code	Description
1	SP00437	COMPLETE AERATOR
2	SP00768	INDICATOR RING
3	SP00464	BASE
4	SP00493	COMPLETE SPOUT
5	SP01210	CARTRIDGE
6	SP00687	SPECIAL TOOL
7	SP00287	FINISHING RING NUT

N°	Code	Description
8	SP01306	BLU SUPPLY HOSE
9	SP01307	RED SUPPLY HOSE
10	SP00289	FIXING RING NUT
11	SP00327	HANDLE
12	SP00462	FIXING SET
13	SP00603	GASKETS AND ANTI-FRICTION RINGS

Gessi S.p.A. Parco Gessi, 13037 Serravalle Sesia (Vercelli) Italy Tel. +39 0163 454111 Fax. +39 0163 453150 - www.gessi.com - gessi@gessi.it This drawing, as required by law, may not be made public or reproduced without the written authorization of GESSI S.p.A. Copyright GESSI S.p.A.