GESSI

58701

validity date
≥ 09/2018



GPF58701000000G000

INCISO

Three hole sink mixer.

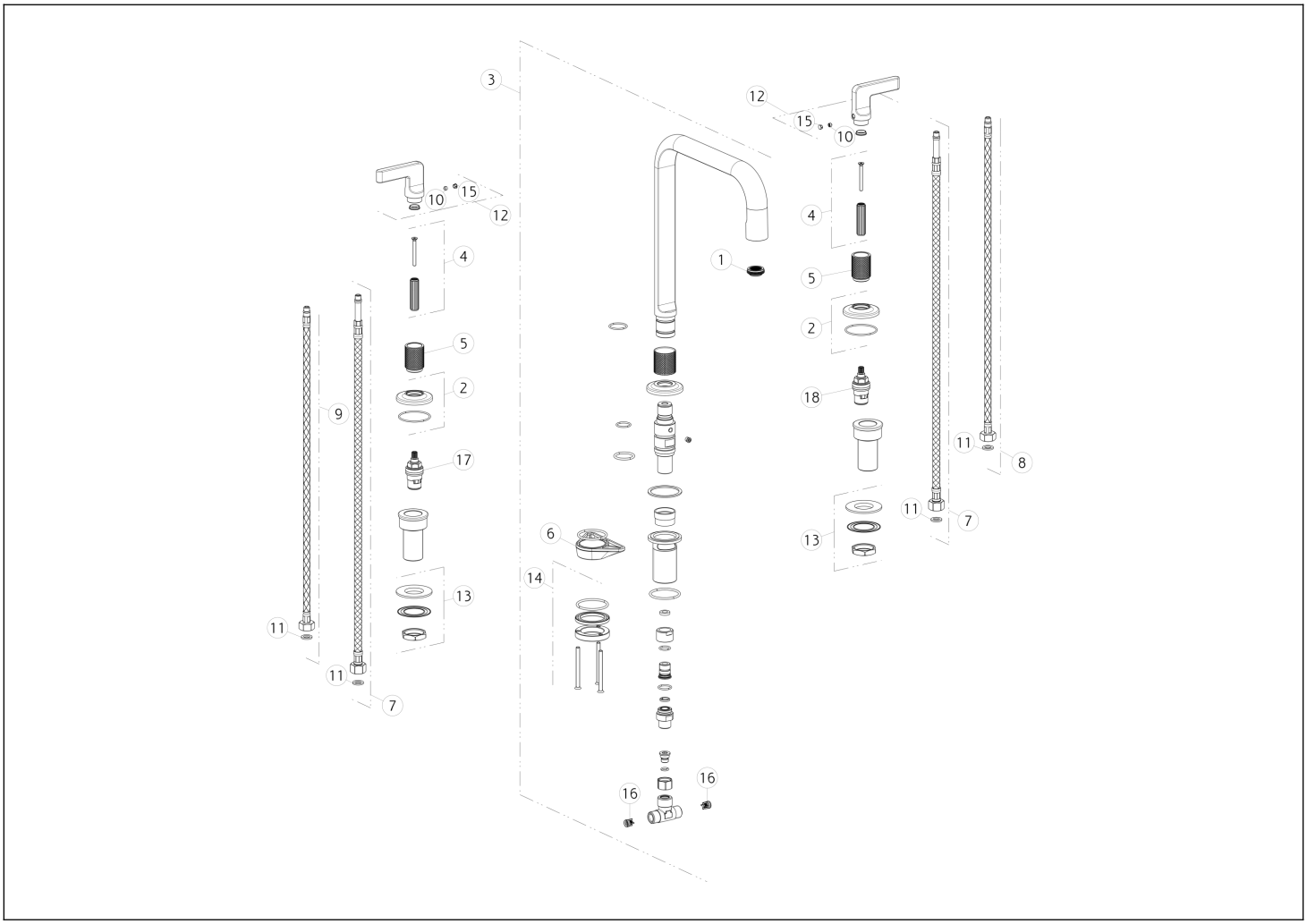

N°	Code	Description
1	SP00066	AERATOR
2	SP02603	BASE
3	SP02263	COMPLETE SPOUT
4	SP02602	BUSH
5	SP01987	FINISHING BUSHING
6	SP00329	TRIANGULAR FLANGE
7	SP02468	HOSE
8	SP01284	BLU SUPPLY HOSE
9	SP01285	RED SUPPLY HOSE

N°	Code	Description
10	SP00137	SCREW
11	SP00064	GASKET
12	SP01865	HANDLE
13	SP01222	FIXING SET
14	SP01261	FIXING SET
15	SP00002	SCREW COVER
16	SP00433	NON RETURN VALVE
17	SP00129	HEADVALVE
18	SP00590	HEADVALVE

Gessi S.p.A. Parco Gessi, 13037 Serravalle Sesia (Vercelli) Italy Tel. +39 0163 454111 Fax. +39 0163 453150 - www.gessi.com - gessi@gessi.it This drawing, as required by law, may not be made public or reproduced without the written authorization of GESSI S.p.A. Copyright GESSI S.p.A.