GESSI

60305

validity date
≥ 01/2020



GPF60305000000G000

STELO

Single-lever swivel sink mixer.

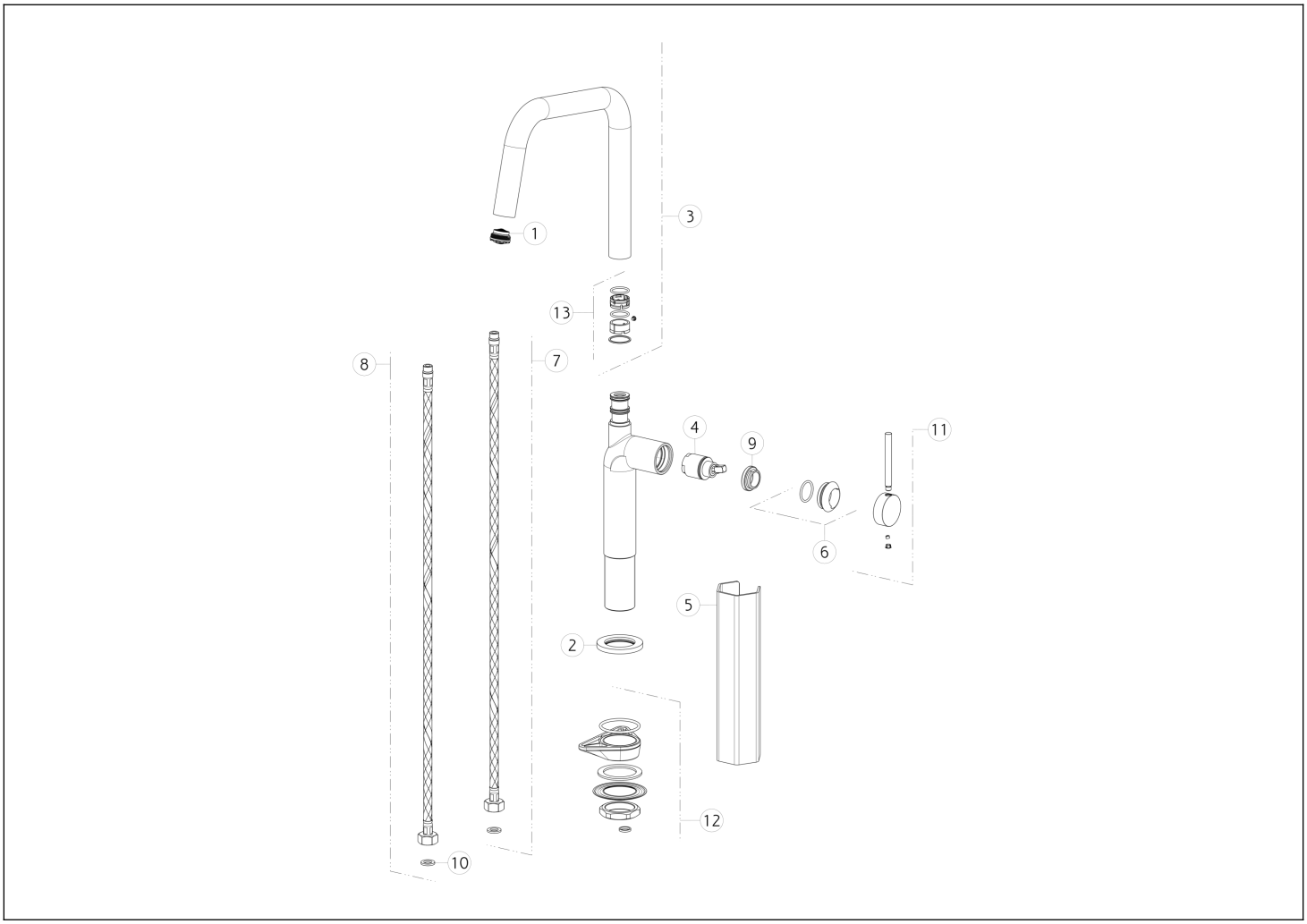

N°	Code	Description
1	SP00499	AERATOR
2	SP00464	BASE
3	SP02578	COMPLETE SPOUT
4	SP02572	CARTRIDGE
5	SP00687	SPECIAL TOOL
6	SP02573	FINISHING RING NUT
7	SP01306	BLU SUPPLY HOSE

N°	Code	Description
8	SP01307	RED SUPPLY HOSE
9	SP00651	FIXING RING NUT
10	SP00064	GASKET
11	SP02574	HANDLE
12	SP00462	FIXING SET
13	SP02570	GASKETS AND ANTI-FRICTION RINGS

Gessi S.p.A. Parco Gessi, 13037 Serravalle Sesia (Vercelli) Italy Tel. +39 0163 454111 Fax. +39 0163 453150 - www.gessi.com - gessi@gessi.it This drawing, as required by law, may not be made public or reproduced without the written authorization of GESSI S.p.A. Copyright GESSI S.p.A.