GESSI

60073

validity date
≥ 09/2019



GPF60073000000G000

FISSO

Single-lever swivel sink mixer.

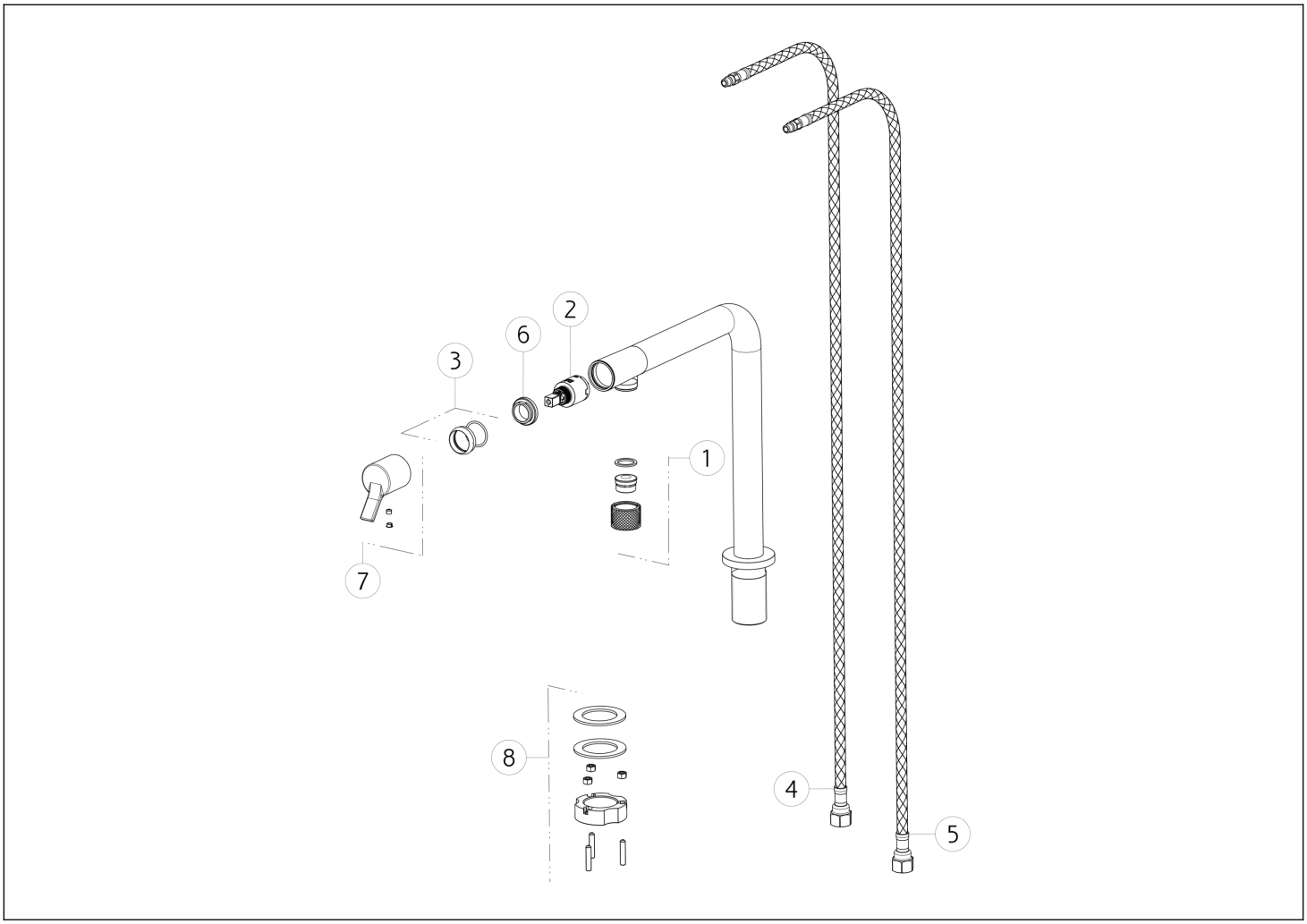

N°	Code	Description
1	SP02536	COMPLETE AERATOR
2	SP00638	CARTRIDGE
3	SP02535	FINISHING RING NUT
4	SP02565	BLU SUPPLY HOSE

N°	Code	Description
5	SP02564	RED SUPPLY HOSE
6	SP00651	FIXING RING NUT
7	SP02324	HANDLE
8	SP01703	FIXING SET

Gessi S.p.A. Parco Gessi, 13037 Serravalle Sesia (Vercelli) Italy Tel. +39 0163 454111 Fax. +39 0163 453150 - www.gessi.com - gessi@gessi.it This drawing, as required by law, may not be made public or reproduced without the written authorization of GESSI S.p.A. Copyright GESSI S.p.A.