GESSI

60640

validity date
≥ 06/2023



GPF6064000000G000

FISSO

Single-lever sink mixer with pull-out dual-jet handshower.

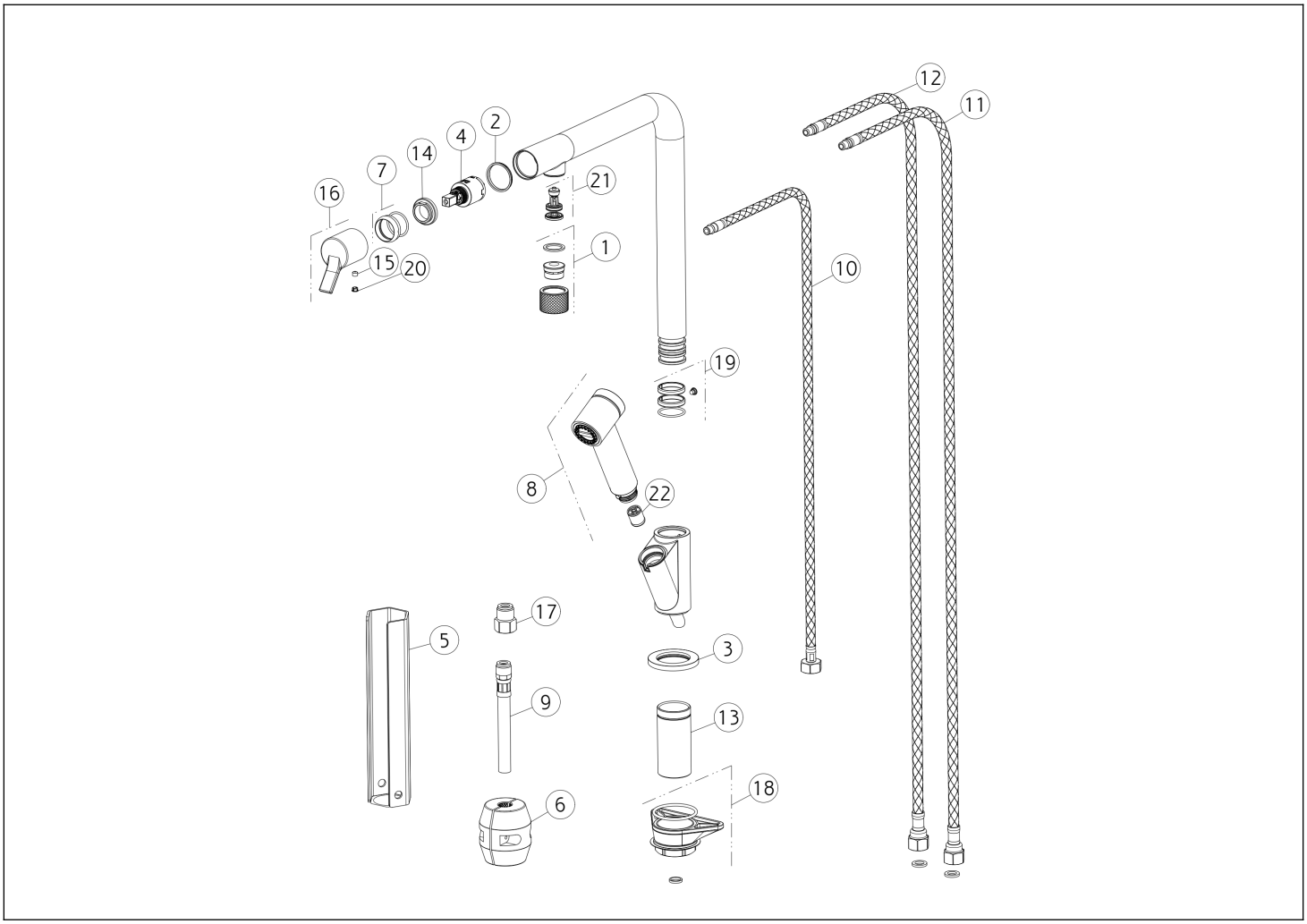

N°	Code	Description
1	SP02536	AERATOR
2	SP00768	INDICATOR RING
3	SP00464	BASE
4	SP01210	CARTRIDGE
5	SP00687	SPECIAL TOOL
6	SP00339	COUNTERWEIGHT
7	SP02535	FINISHING RING NUT
8	SP04314	HANDSHOWER
9	SP00633	HOSE
10	SP04317	HOSE
11	SP04315	BLU SUPPLY HOSE

N°	Code	Description
12	SP04316	RED SUPPLY HOSE
13	SP03239	SHANK
14	SP00289	FIXING RING NUT
15	SP00137	SCREW
16	SP02324	HANDLE
17	SP04318	NIPPLE
18	SP00462	FIXING SET
19	SP04313	GASKETS AND ANTI-FRICTION RINGS
20	SP00002	SCREW COVER
21	SP04312	VALVE
22	SP00336	NON RETURN VALVE

Gessi S.p.A. Parco Gessi, 13037 Serravalle Sesia (Vercelli) Italy Tel. +39 0163 454111 Fax. +39 0163 453150 - www.gessi.com - gessi@gessi.it This drawing, as required by law, may not be made public or reproduced without the written authorization of GESSI S.p.A. Copyright GESSI S.p.A.