GESSI

# 60411

validity date
≥ 12/2019



GPF60411100000G000

## INEDITO

Single-lever swivel sink mixer.

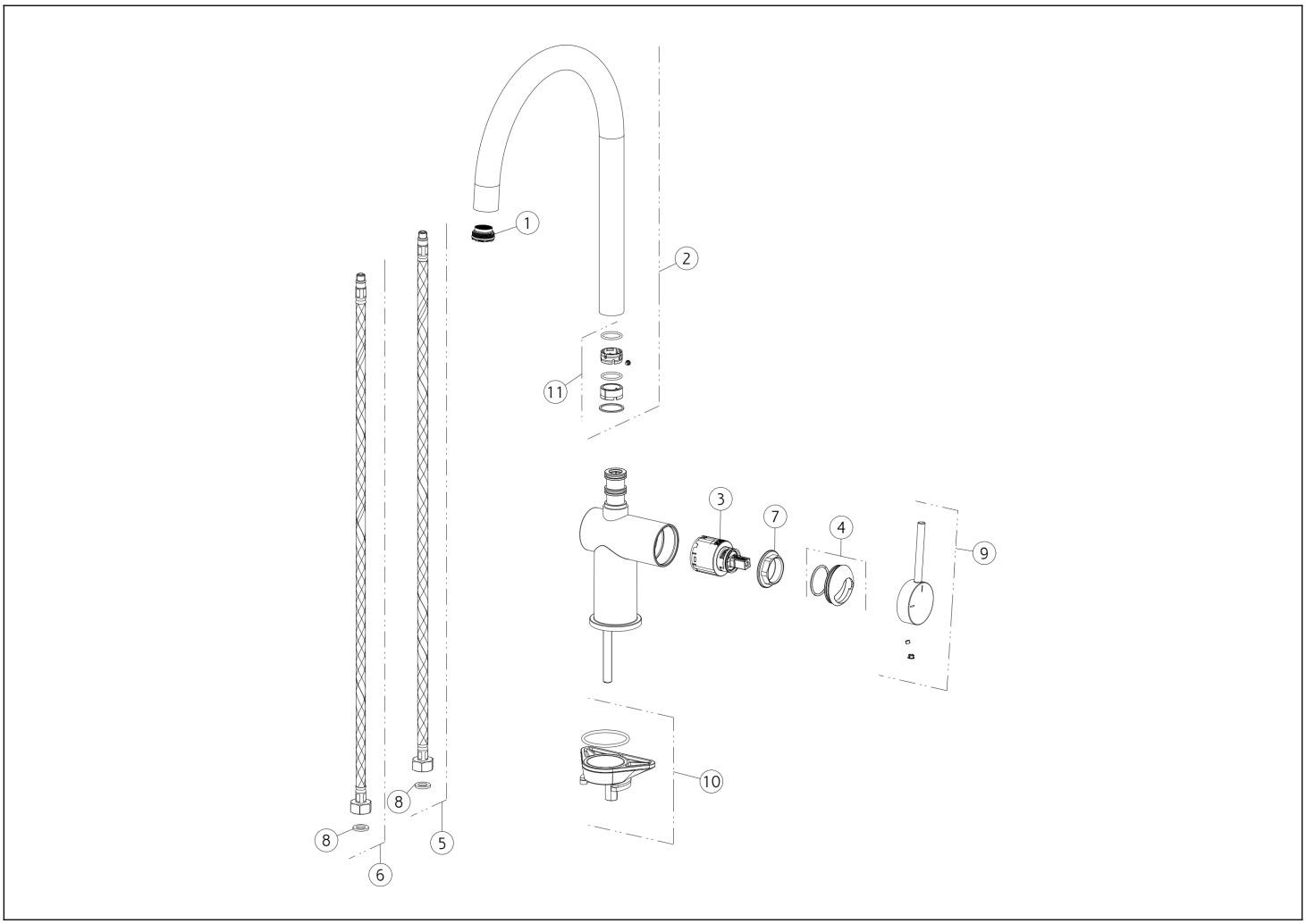


| N° | Code | Description |
|---|---|---|
| 1 | SP00499 | AERATOR |
| 2 | SP02571 | COMPLETE SPOUT |
| 3 | SP00902 | CARTRIDGE |
| 4 | SP03280 | FINISHING RING NUT |
| 5 | SP01591 | BLU SUPPLY HOSE |
| 6 | SP01590 | RED SUPPLY HOSE |

| N° | Code | Description |
|---|---|---|
| 7 | SP00406 | FIXING RING NUT |
| 8 | SP00064 | GASKET |
| 9 | SP02860 | HANDLE |
| 10 | SP02917 | FIXING SET |
| 11 | SP02570 | GASKETS AND ANTI-FRICTION RINGS |

Gessi S.p.A. Parco Gessi, 13037 Serravalle Sesia (Vercelli) Italy Tel. +39 0163 454111 Fax. +39 0163 453150 - www.gessi.com - gessi@gessi.it This drawing, as required by law, may not be made public or reproduced without the written authorization of GESSI S.p.A. Copyright GESSI S.p.A.