GESSI

60478

validity date
≥ 10/2020



GPF6047800000G000

INEDITO

Single-lever sink mixer with pull-out dual-jet handshower.

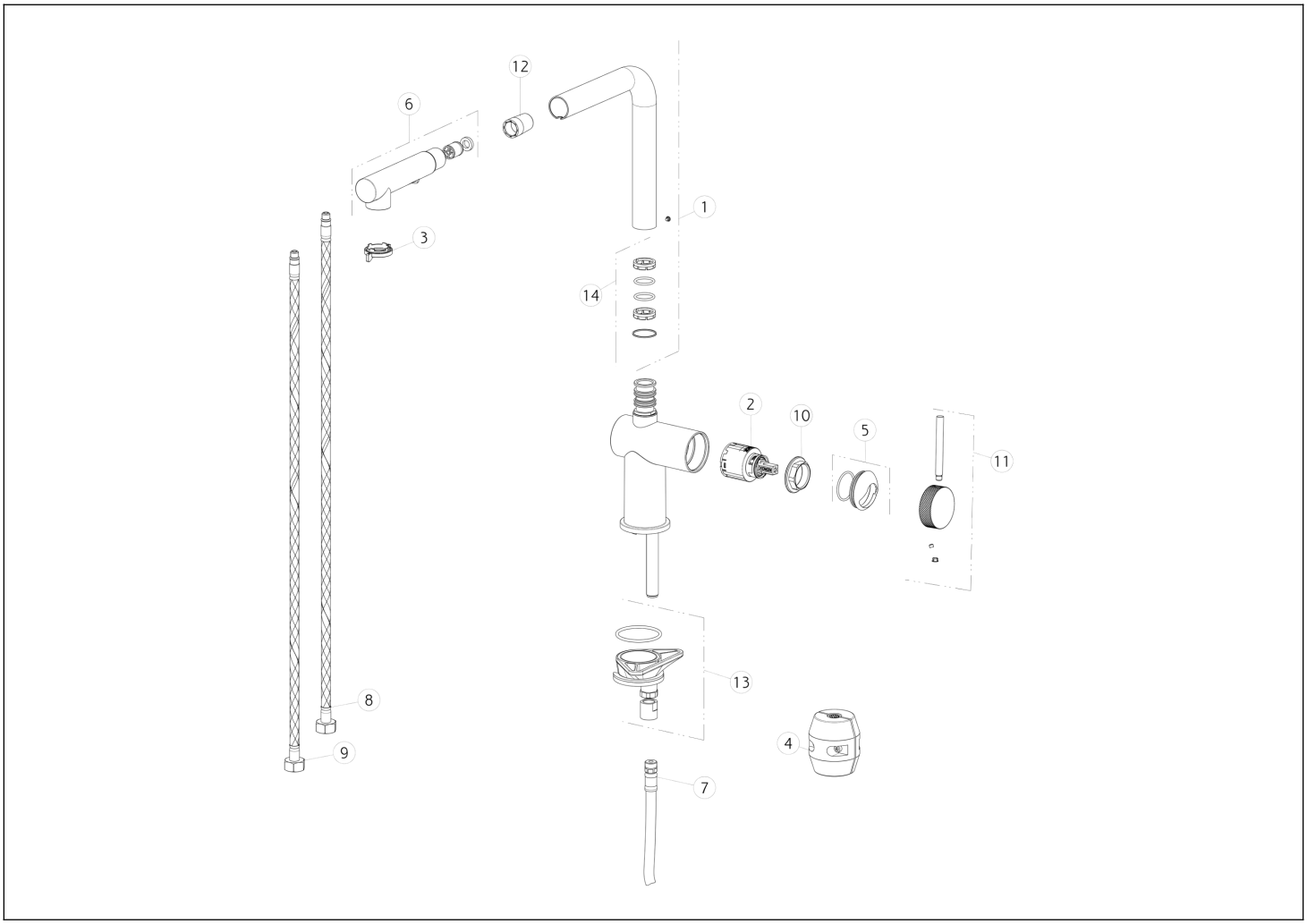

N°	Code	Description
1	SP02580	COMPLETE SPOUT
2	SP02285	CARTRIDGE
3	SP00448	SPECIAL TOOL
4	SP00680	COUNTERWEIGHT
5	SP02859	FINISHING RING NUT
6	SP03135	HANDSHOWER
7	SP01677	HOSE

N°	Code	Description
8	SP03016	BLU SUPPLY HOSE
9	SP03017	RED SUPPLY HOSE
10	SP00406	FIXING RING NUT
11	SP02400	HANDLE
12	SP02575	NIPPLE
13	SP02857	FIXING SET
14	SP02577	GASKETS AND ANTI-FRICTION RINGS

Gessi S.p.A. Parco Gessi, 13037 Serravalle Sesia (Vercelli) Italy Tel. +39 0163 454111 Fax. +39 0163 453150 - www.gessi.com - gessi@gessi.it This drawing, as required by law, may not be made public or reproduced without the written authorization of GESSI S.p.A. Copyright GESSI S.p.A.