GESSI

60071

validity date
≥ 08/2018



GPF60071000000G000

SU & GIU'

Under-window single-lever swivel sink mixer.

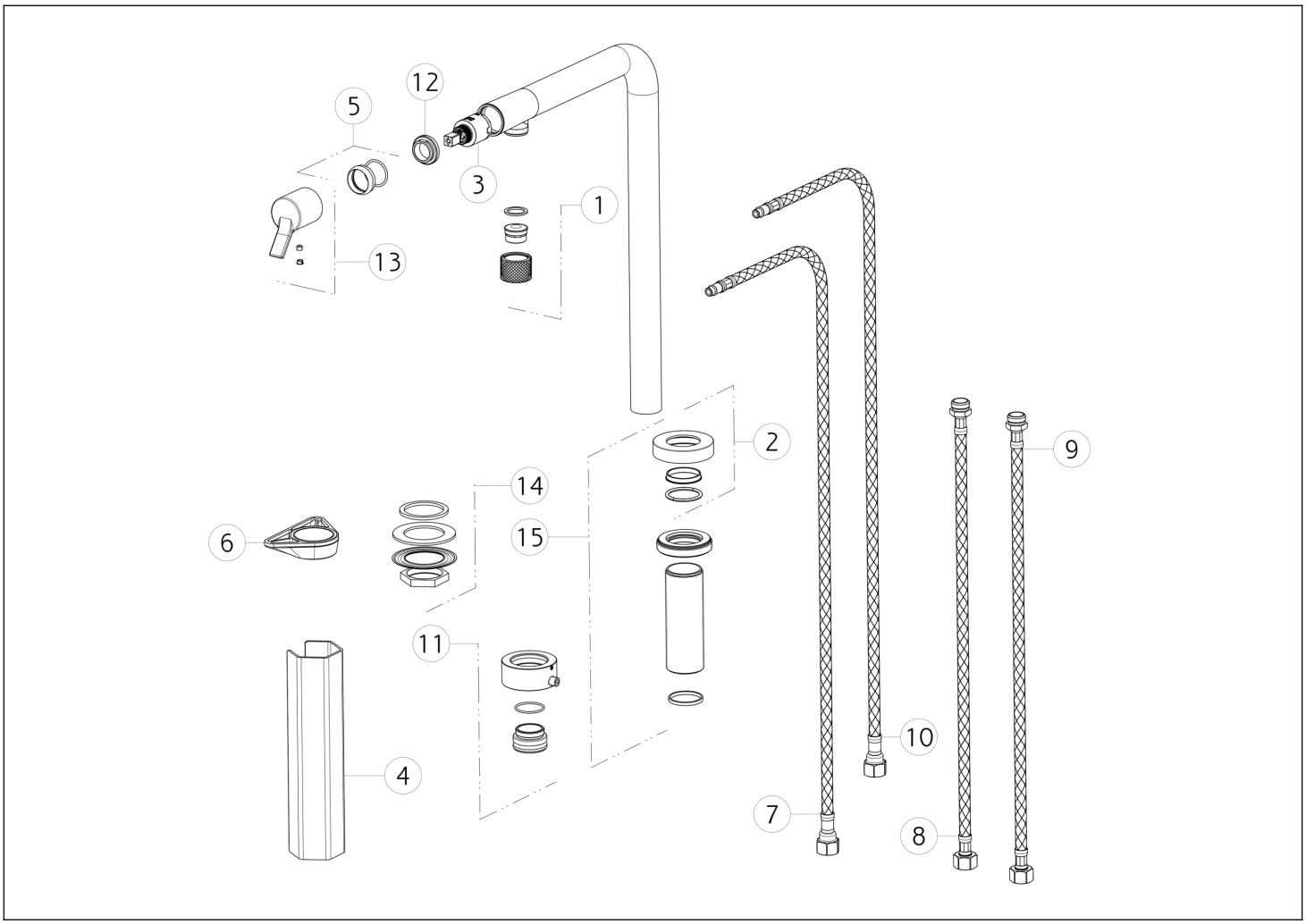

N°	Code	Description
1	SP02536	COMPLETE AERATOR
2	SP02538	BASE
3	SP00638	CARTRIDGE
4	SP00687	SPECIAL TOOL
5	SP02535	FINISHING RING NUT
6	SP00623	TRIANGULAR FLANGE
7	SP02543	BLU SUPPLY HOSE
8	SP02544	BLU SUPPLY HOSE

N°	Code	Description
9	SP02541	RED SUPPLY HOSE
10	SP02542	RED SUPPLY HOSE
11	SP02540	LOCK NUT
12	SP00651	FIXING RING NUT
13	SP02324	HANDLE
14	SP02537	FIXING SET
15	SP02539	SUPPORT

Gessi S.p.A. Parco Gessi, 13037 Serravalle Sesia (Vercelli) Italy Tel. +39 0163 454111 Fax. +39 0163 453150 - www.gessi.com - gessi@gessi.it This drawing, as required by law, may not be made public or reproduced without the written authorization of GESSI S.p.A. Copyright GESSI S.p.A.