GESSI

60201

validity date
≥ 10/2019



GPF60201000000G000

OFFICINE GESSI

Single-lever swivel sink mixer.

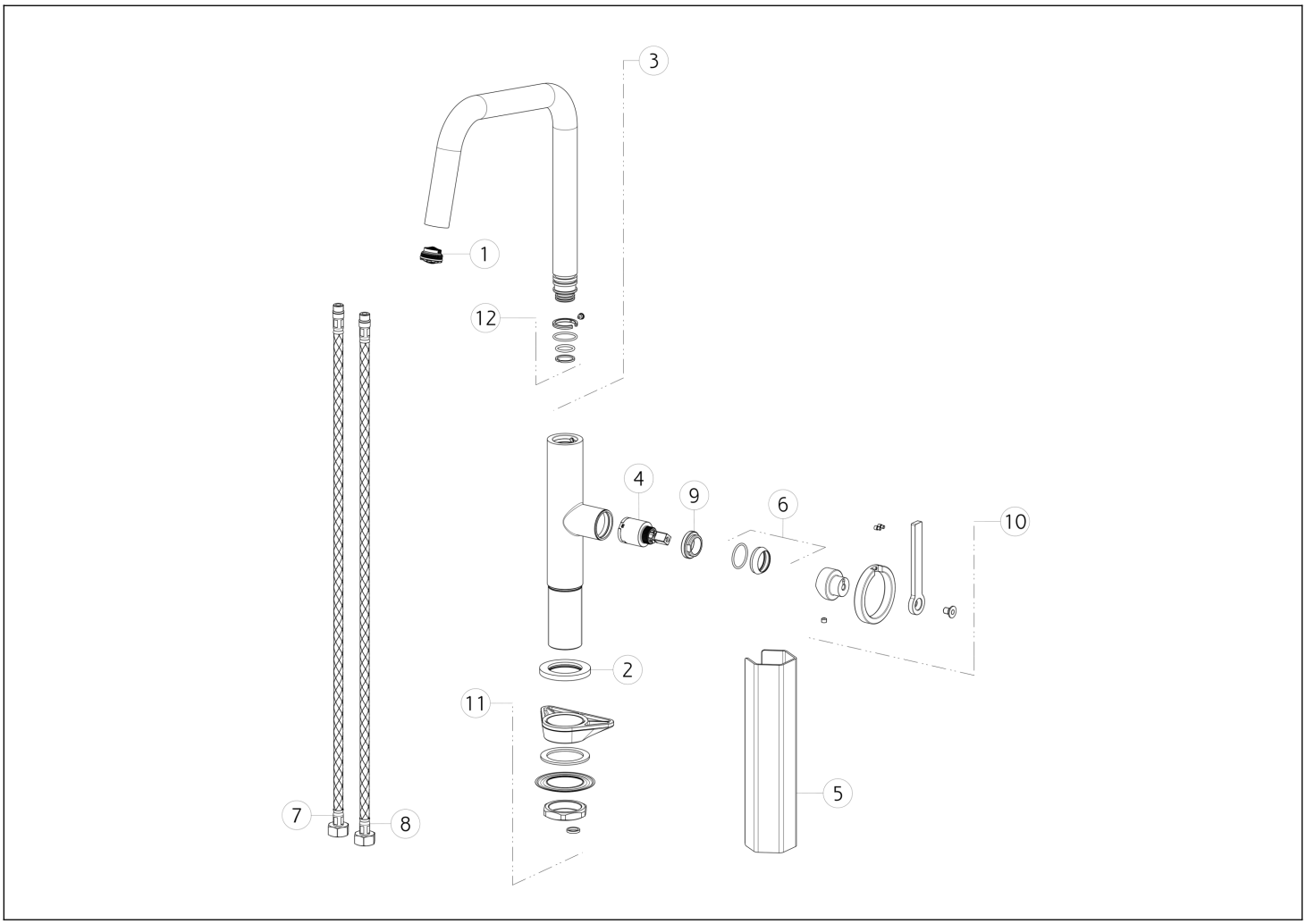

N°	Code	Description
1	SP00499	AERATOR
2	SP00464	BASE
3	SP02566	COMPLETE SPOUT
4	SP00638	CARTRIDGE
5	SP00687	SPECIAL TOOL
6	SP00643	FINISHING RING NUT

N°	Code	Description
7	SP01811	BLU SUPPLY HOSE
8	SP01812	RED SUPPLY HOSE
9	SP00651	FIXING RING NUT
10	SP02529	HANDLE
11	SP00462	FIXING SET
12	SP00977	GASKETS AND ANTI-FRICTION RINGS

Gessi S.p.A. Parco Gessi, 13037 Serravalle Sesia (Vercelli) Italy Tel. +39 0163 454111 Fax. +39 0163 453150 - www.gessi.com - gessi@gessi.it This drawing, as required by law, may not be made public or reproduced without the written authorization of GESSI S.p.A. Copyright GESSI S.p.A.