GESSI

60307

validity date
≥ 11/2019



GPF60307000000G000

STELO

Single-lever sink mixer with pull-out dual-jet handshower.

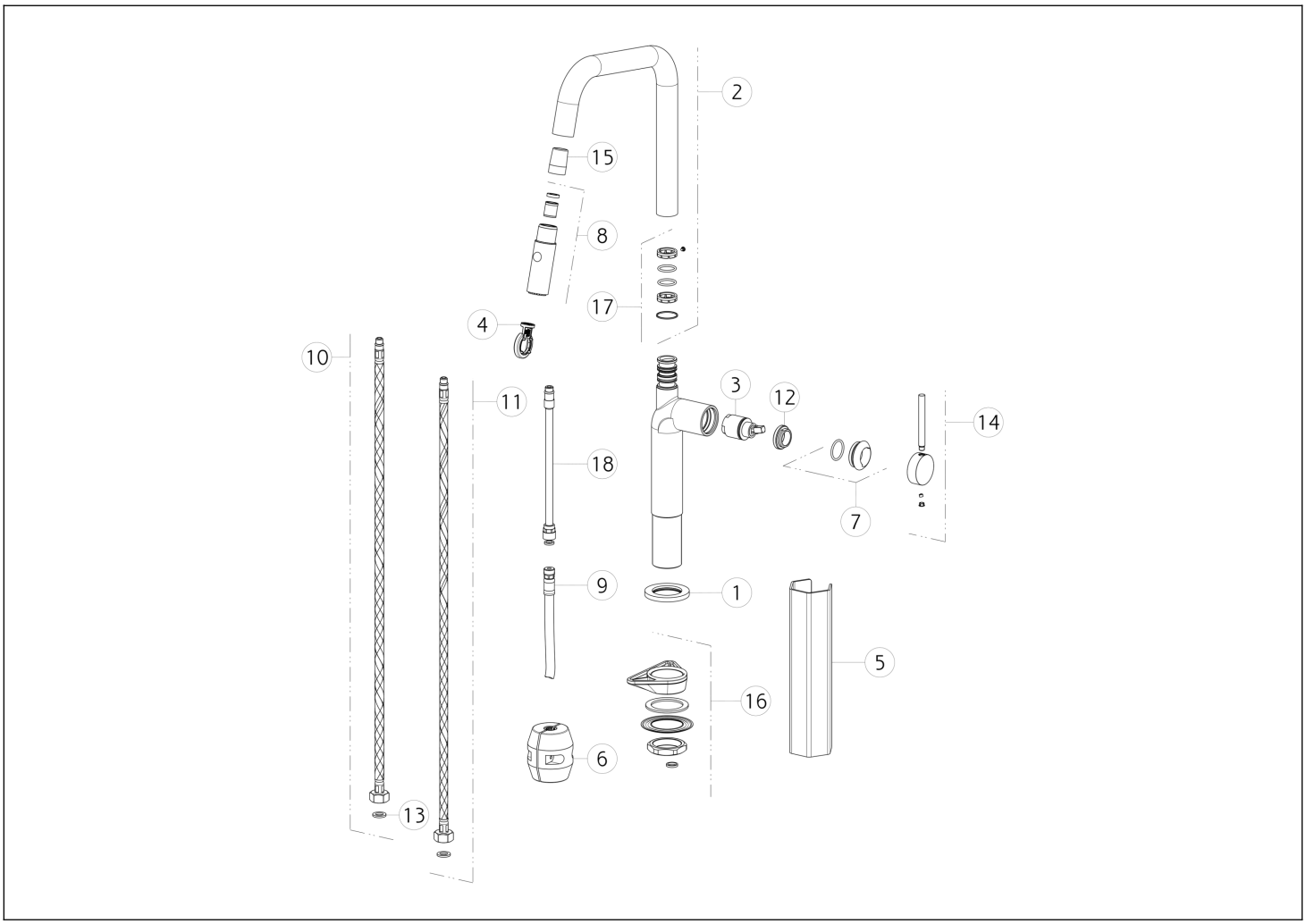

N°	Code	Description
1	SP00464	BASE
2	SP02584	COMPLETE SPOUT
3	SP02572	CARTRIDGE
4	SP00359	SPECIAL TOOL
5	SP00687	SPECIAL TOOL
6	SP00680	COUNTERWEIGHT
7	SP02573	FINISHING RING NUT
8	SP02582	HANDSHOWER
9	SP02032	HOSE

N°	Code	Description
10	SP01591	BLU SUPPLY HOSE
11	SP01590	RED SUPPLY HOSE
12	SP00651	FIXING RING NUT
13	SP00064	GASKET
14	SP02574	HANDLE
15	SP02575	NIPPLE
16	SP00462	FIXING SET
17	SP02577	GASKETS AND ANTI-FRICTION RINGS
18	SP00737	TUBE

Gessi S.p.A. Parco Gessi, 13037 Serravalle Sesia (Vercelli) Italy Tel. +39 0163 454111 Fax. +39 0163 453150 - www.gessi.com - gessi@gessi.it This drawing, as required by law, may not be made public or reproduced without the written authorization of GESSI S.p.A. Copyright GESSI S.p.A.