GESSI

50103

GPF50103100000G000

HELIUM

validity date
≥ 06/2020



Single-lever sink mixer with pull-out single-jet handshower.

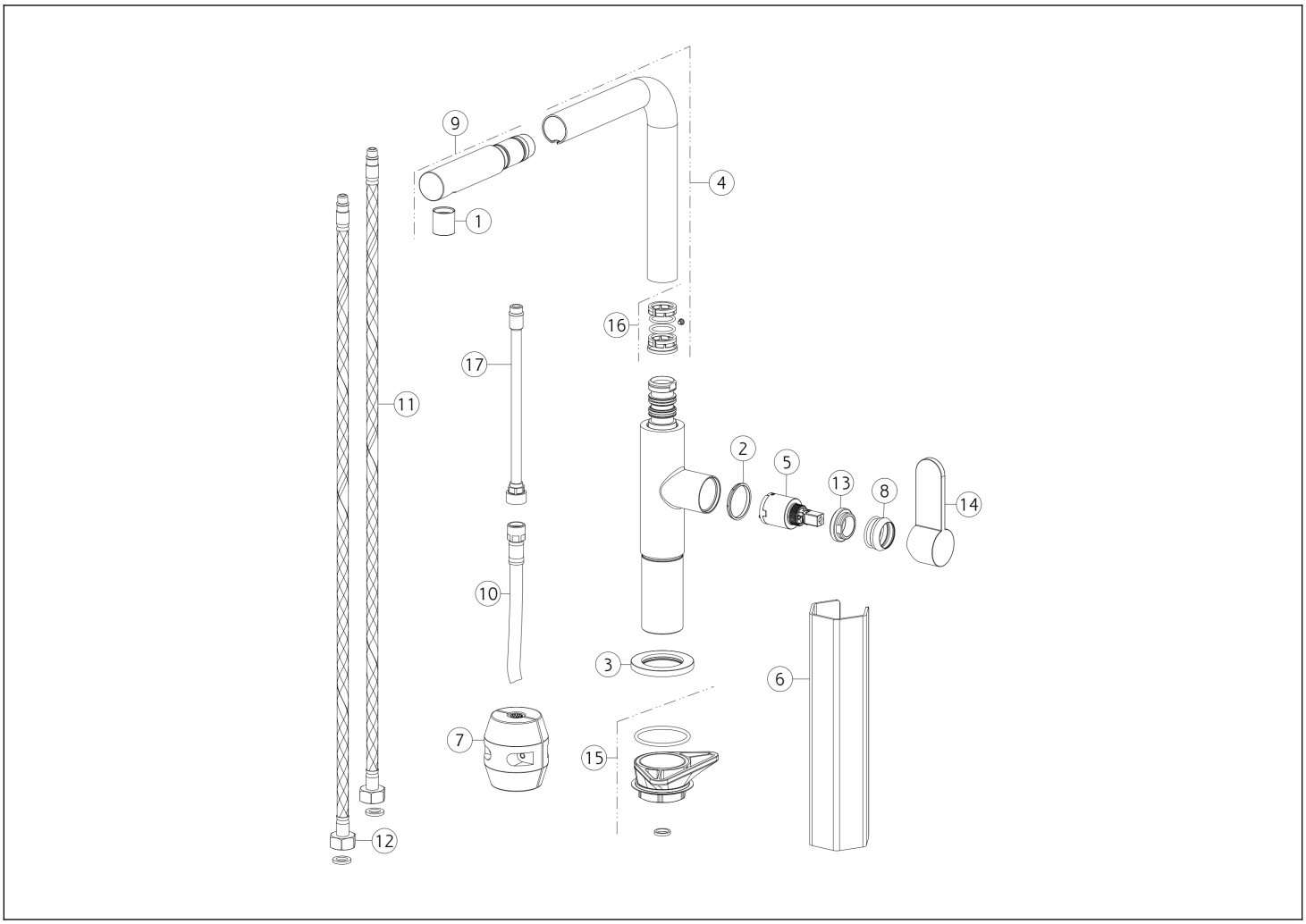

N°	Code	Description
1	SP02164	COMPLETE AERATOR
2	SP00768	INDICATOR RING
3	SP00464	BASE PLATE
4	SP00387	COMPLETE SPOUT
5	SP01210	CARTRIDGE
6	SP00687	KEY
7	SP00680	COUNTERWEIGHT
8	SP00287	FINISHING RING NUT
9	SP00434	HANDSHOWER

N°	Code	Description
10	SP02032	HOSE
11	SP01591	BLUE SUPPLY HOSE
12	SP01590	RED SUPPLY HOSE
13	SP00289	FIXING RING NUT
14	SP00327	HANDLE
15	SP00462	FIXING KIT
16	SP00502	GASKETS AND ANTI-FRICTION RINGS
17	SP00737	TUBE

Gessi S.p.A. Parco Gessi, 13037 Serravalle Sesia (Vercelli) Italy Tel. +39 0163 454111 Fax. +39 0163 453150 - www.gessi.com - gessi@gessi.it This drawing, as required by law, may not be made public or reproduced without the written authorization of GESSI S.p.A. Copyright GESSI S.p.A.