GESSI

50311

validity date
≥ 08/2020



GPF50311110000G000

OXYGENE

Under-window single-lever swivel sink mixer.

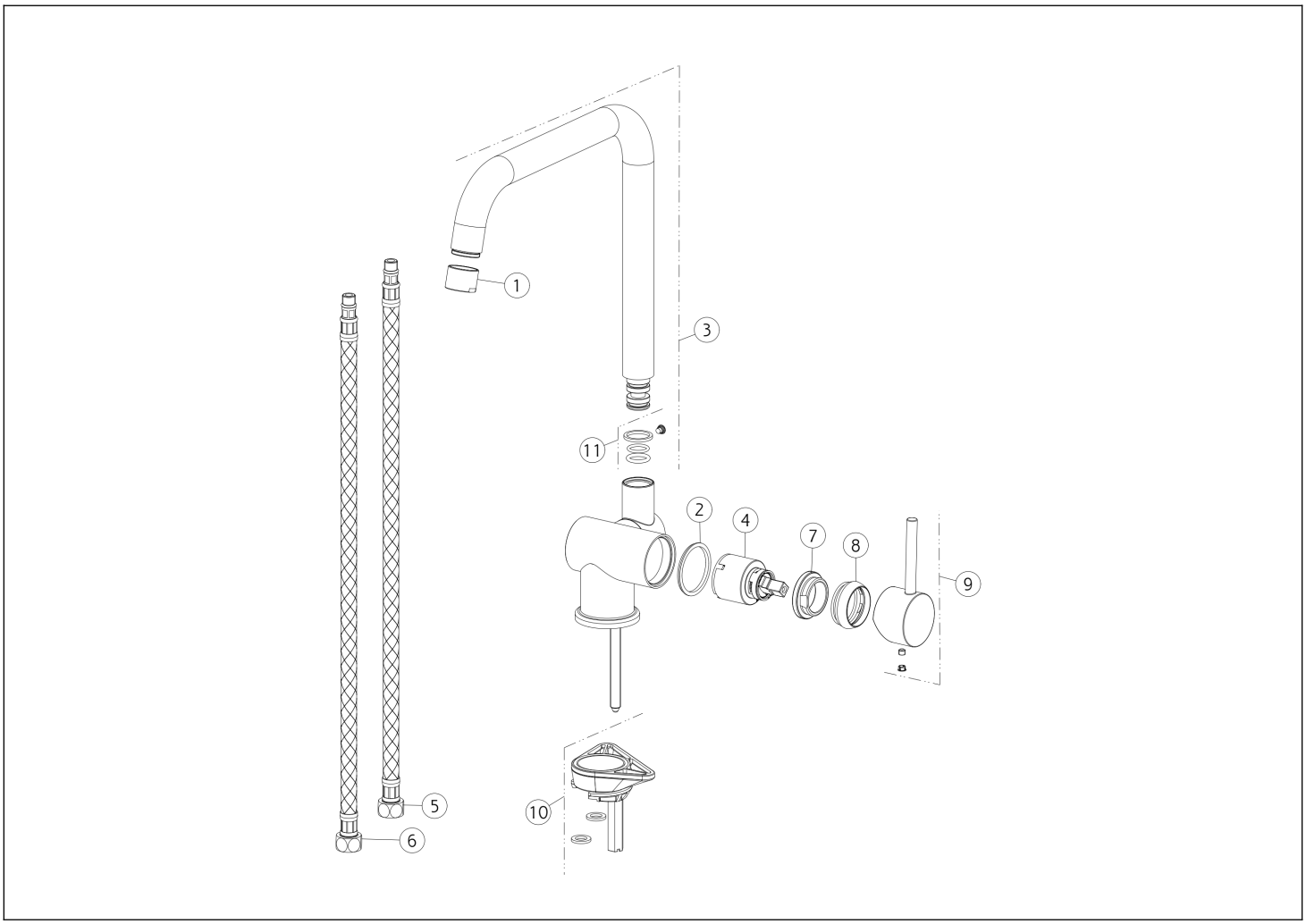

N°	Code	Description
1	SP00350	COMPLETE AERATOR
2	SP00545	INDICATOR RING
3	SP03743	COMPLETE SPOUT
4	SP00013	CARTRIDGE
5	SP00534	BLU SUPPLY HOSE
6	SP00594	RED SUPPLY HOSE

N°	Code	Description
7	SP00023	FIXING RING NUT
8	SP00084	FINISHING RING NUT
9	SP01093	HANDLE
10	SP00174	FIXING SET
11	SP04495	GASKETS AND ANTI-FRICTION RINGS

Gessi S.p.A. Parco Gessi, 13037 Serravalle Sesia (Vercelli) Italy Tel. +39 0163 454111 Fax. +39 0163 453150 - www.gessi.com - gessi@gessi.it This drawing, as required by law, may not be made public or reproduced without the written authorization of GESSI S.p.A. Copyright GESSI S.p.A.