GESSI

# 58703

GPF58703000000G000

## INCISO

validity date
≥ 11/2018



Four hole sink mixer with pull-out single-jet handshower.

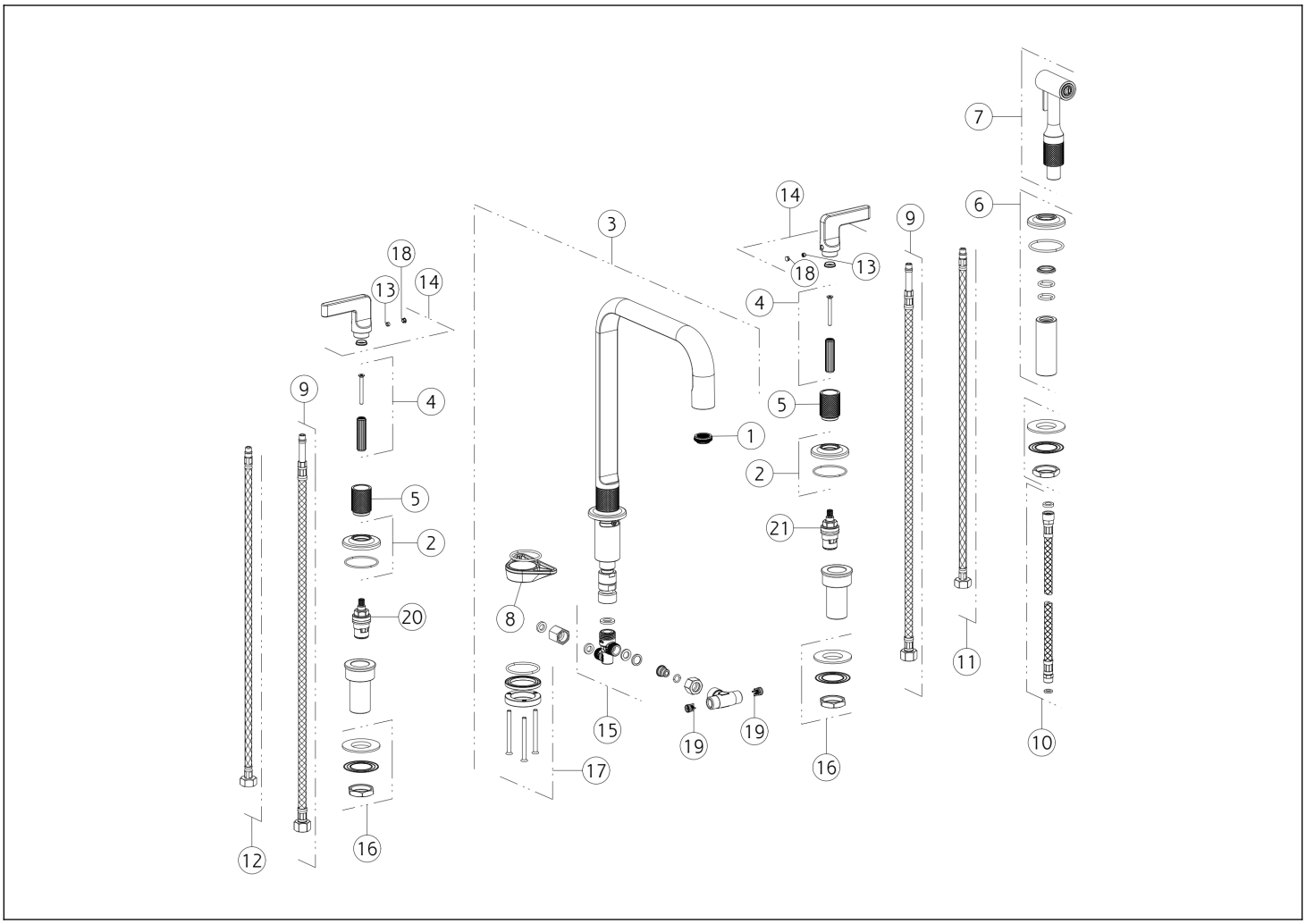


| N° | Code | Description |
|---|---|---|
| 1 | SP00066 | AERATOR |
| 2 | SP02603 | BASE |
| 3 | SP03008 | COMPLETE SPOUT |
| 4 | SP02602 | BUSH |
| 5 | SP01987 | FINISHING BUSHING |
| 6 | SP02806 | SHOWER HOLDER |
| 7 | SP02743 | HANDSHOWER |
| 8 | SP00329 | TRIANGULAR FLANGE |
| 9 | SP02468 | HOSE |
| 10 | SP03532 | HOSE |
| 11 | SP01284 | BLU SUPPLY HOSE |

| N° | Code | Description |
|---|---|---|
| 12 | SP01285 | RED SUPPLY HOSE |
| 13 | SP00137 | SCREW |
| 14 | SP01865 | HANDLE |
| 15 | SP03067 | NIPPLE |
| 16 | SP01222 | FIXING SET |
| 17 | SP01261 | FIXING SET |
| 18 | SP00002 | SCREW COVER |
| 19 | SP00433 | NON RETURN VALVE |
| 20 | SP00129 | HEADVALVE |
| 21 | SP00590 | HEADVALVE |

Gessi S.p.A. Parco Gessi, 13037 Serravalle Sesia (Vercelli) Italy Tel. +39 0163 454111 Fax. +39 0163 453150 - www.gessi.com - gessi@gessi.it This drawing, as required by law, may not be made public or reproduced without the written authorization of GESSI S.p.A. Copyright GESSI S.p.A.