GESSI

HELIUM

60075

Single-lever swivel sink mixer.



TECHNICAL FEATURES

- **Drive:** Single lever
- **Presence of water supply connections:** Sì
- **Connection hoses:** Flexible supply hoses included
- **Water supply connections:** G3/8"
- **Height:** 407 mm
- **Width:** 98 mm
- **Depth:** 252 mm
- **Water point presence:** Yes
- **Water point height:** 282 mm
- **Water point length:** 216 mm
- **Electronics:** No
- **Customizable product:** No
- **Handshower presence:** No
- **Sink mixer type:** Faucet with swivel spout
- **Spout shape:** J-shaped spout
- **Handle lever position:** Side-Lever
- **Swivel spout presence:** With swivel spout
- **Spout rotation angle:** 360°
- **Swivel head presence:** No
- **Connection hose length:** 33,5 mm
- **Installation hole diameter:** 35 mm
- **Under-window installation:** No
- **Compatibility for low-pressure applications:** No

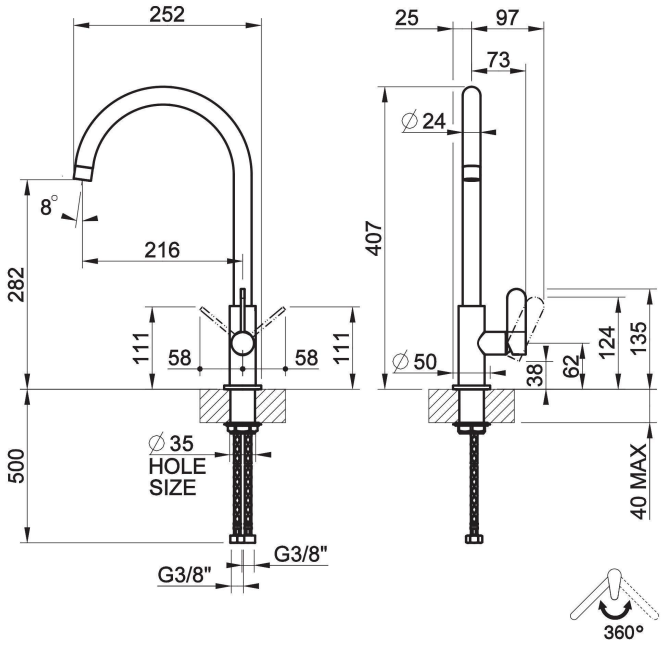

CERTIFICATIONS

- The main components in contact with drinking water comply with ACS requirements, UBA list, KTW BWGL
- Water tightness resistance and long term functionality in accordance with EN-817

Production managed by a certified Quality System compliant with ISO 9001:2015 For additionals approved contact Gessi S.P.A.

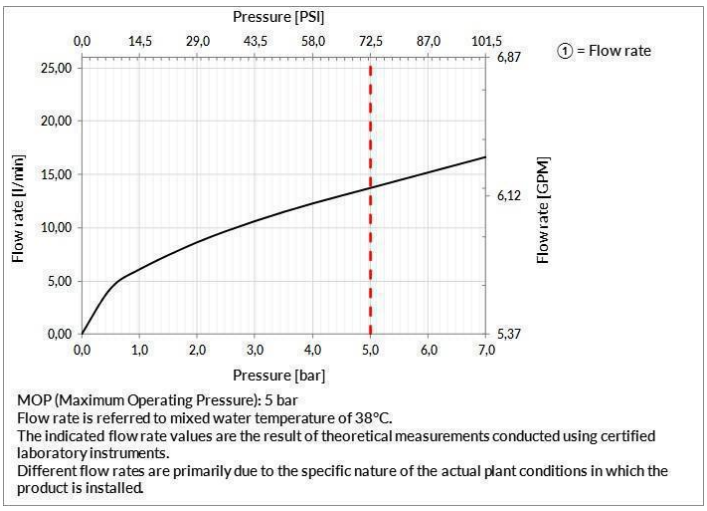

MOP (Maximum Operating Pressure): 5 bar
Flow rate is referred to mixed water temperature of 38°C.
The indicated flow rate values are the result of theoretical measurements conducted using certified laboratory instruments.
Different flow rates are primarily due to the specific nature of the actual plant conditions in which the product is installed.

TECHNICAL PRESCRIPTION

- Test watertight and cleaning of the pipes before installing the tap.
- In order to guarantee a long duration of the product and its total functionality install filter.
- Working maximum pressure value 5 bar - in case of higher pressure, to use a pressure reducer.
- Working pressure for an optimal installation: 3 bar.
- In any case please refer to the instruction manual and warranty provided with the product.
- Supply the product with mains water with a maximum temperature of 70 °C and for short periods of use.

Product, measurements and specifications shown are subject to change without notice. Please refer to the current price list for further information Gessi S.p.A. Parco Gessi, 13037 Serravalle Sesia (Vercelli) Italy - Tel. +39 0163 454111 - www.gessi.com - lead@gessi.it

INDICATIONS FOR CLEANING

Clean only with a new microfiber cloth and soapy water and dry with a dry cloth. Detergents, solvents, alcohol, abrasive sponges, wire, wool, alcohol, etc., should not be used as these could irreparably damage product surfaces compromising its aesthetics and brilliance.

ACCESSORIES AND FITTINGS

For additional matching bathroom accessories and fittings available, see official Gessi price list.

FINISHES CHARACTERISTICS

CHROME

Gessi products have a Chromium Plating finish. This is a high-quality coating composed of a first layer of nickel, a second layer of chromium, a very shiny appearance, high resistance to corrosion and abrasion.

LAQUERED

Gessi products have an industrial lacquer finish. This coating is obtained by means of a special industrial process that involves spraying the lacquer onto the product with a subsequent firing process at a high temperature. The lacquer used is of the highest quality and ensures maximum resistance and durability. The different lacquer types depend on the product type.

PVD COLORS

Gessi products have a PVD finish. This coating is obtained through the PVD (Physical Vapour Deposition) process, which is a state-of-the-art coating process that is highly resistant to abrasion and corrosion. The process is carried out in a vacuum chamber, where the material to be deposited is heated and vaporized, and then condensed onto the product to be coated. The result is a thin, uniform, and highly resistant film.

STAINLESS STEEL

Gessi products have a solid Stainless Steel finish. This is a very high-quality finish, with a very high resistance to corrosion and abrasion. The finish is obtained by means of a special brushing process, which gives the product a very elegant and modern appearance. The finish is also very easy to clean and maintain.

For additionals finishes contact Gessi S.P.A.

Product, measurements and specifications shown are subject to change without notice. Please refer to the current price list for further information Gessi S.p.A. Parco Gessi, 13037 Serravalle Sesia (Vercelli) Italy - Tel. +39 0163 454111 - www.gessi.com - lead@gessi.it