GESSI

60077

GPF60077000000G000

HELIUM

validity date
≥ 10/2018



Single-lever sink mixer with pull-out single-jet handshower.

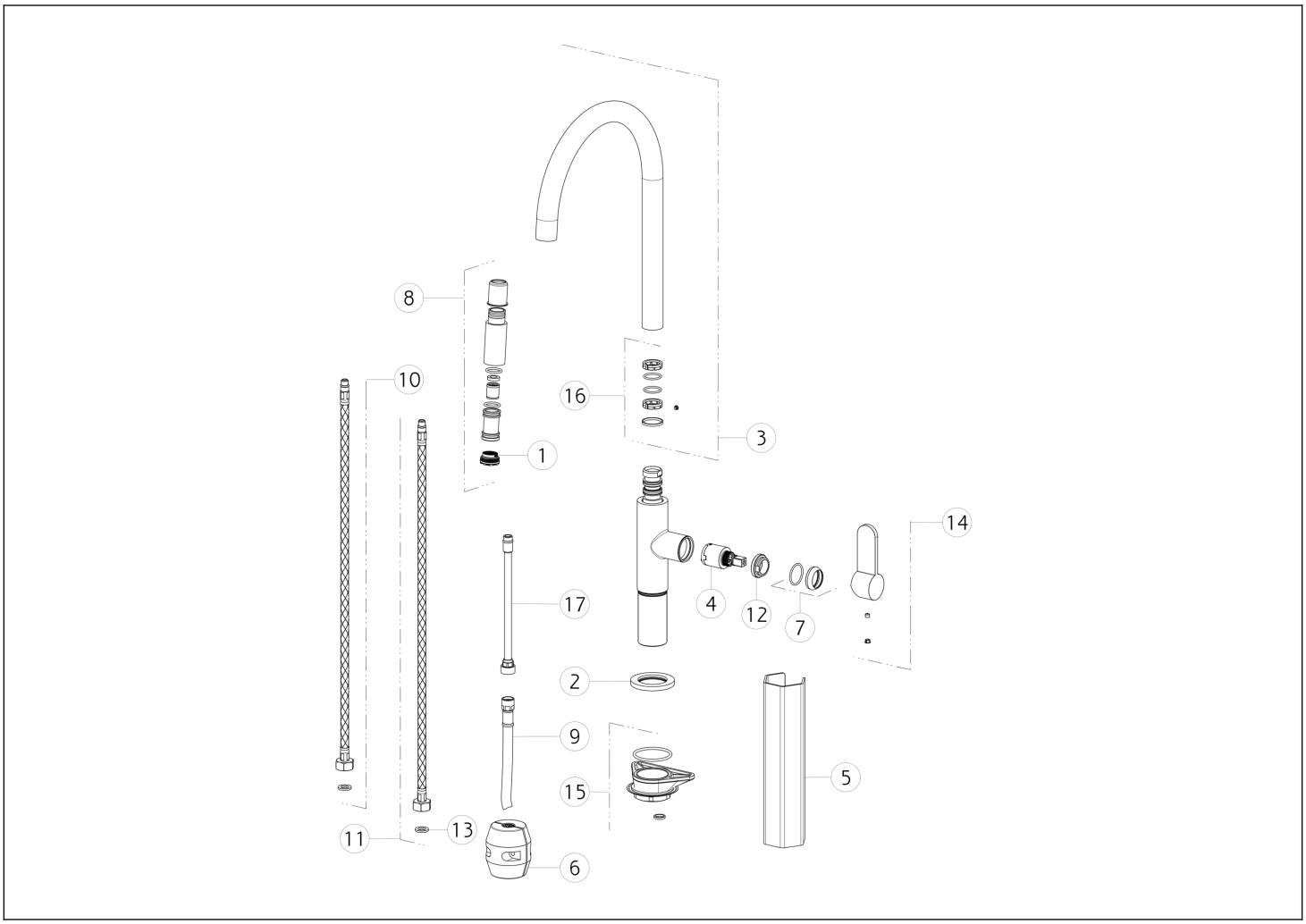

N°	Code	Description
1	SP00499	AERATOR
2	SP00464	BASE PLATE
3	SP00726	SWIVEL SPOUT
4	SP00638	CARTRIDGE
5	SP00687	KEY
6	SP00393	COUNTERWEIGHT
7	SP00643	FINISHING RING NUT
8	SP00727	HANDSHOWER
9	SP00641	HOSE

N°	Code	Description
10	SP01284	BLUE SUPPLY HOSE
11	SP01285	RED SUPPLY HOSE
12	SP00651	FIXING RING NUT
13	SP00064	GASKET
14	SP00327	HANDLE
15	SP00462	FIXING KIT
16	SP00502	GASKETS AND ANTI-FRICTION RINGS
17	SP00737	TUBE

Gessi S.p.A. Parco Gessi, 13037 Serravalle Sesia (Vercelli) Italy Tel. +39 0163 454111 Fax. +39 0163 453150 - www.gessi.com - gessi@gessi.it This drawing, as required by law, may not be made public or reproduced without the written authorization of GESSI S.p.A. Copyright GESSI S.p.A.