GESSI

60620

validity date
≥ 06/2023



GPF6062000000G000

VENTI20

Single-lever swivel sink mixer.

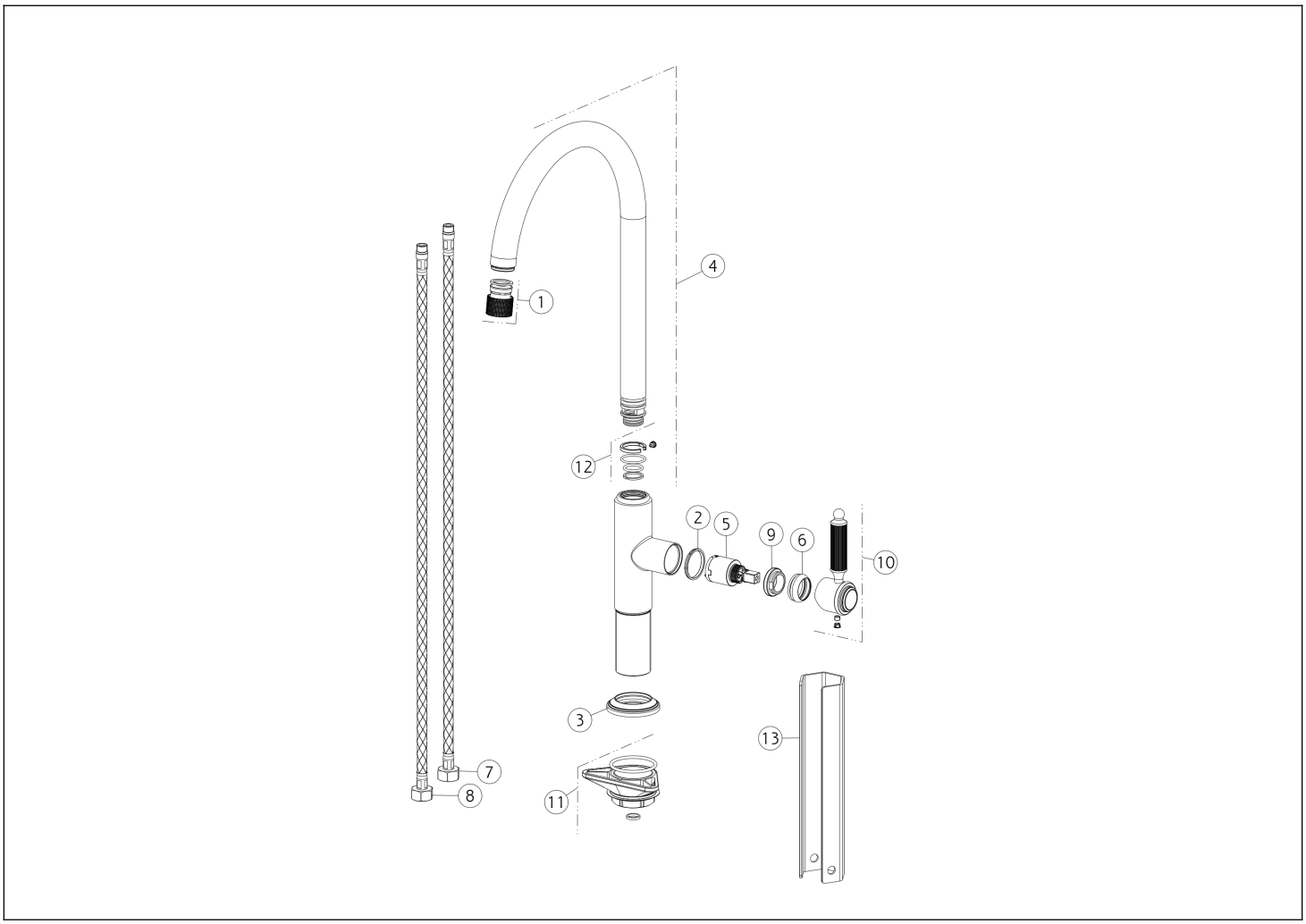

N°	Code	Description
1	SP04342	COMPLETE AERATOR
2	SP00768	INDICATOR RING
3	SP04503	BASE
4	SP04502	COMPLETE SPOUT
5	SP01210	CARTRIDGE
6	SP00287	FINISHING RING NUT
7	SP01306	BLU SUPPLY HOSE

N°	Code	Description
8	SP01307	RED SUPPLY HOSE
9	SP00289	FIXING RING NUT
10	SP04504	HANDLE
11	SP00462	FIXING SET
12	SP00603	GASKETS AND ANTI-FRICTION RINGS
13	SP00687	SPECIAL TOOL

Gessi S.p.A. Parco Gessi, 13037 Serravalle Sesia (Vercelli) Italy Tel. +39 0163 454111 Fax. +39 0163 453150 - www.gessi.com - gessi@gessi.it This drawing, as required by law, may not be made public or reproduced without the written authorization of GESSI S.p.A. Copyright GESSI S.p.A.