GESSI

60650

validity date
≥ 04/2023



GPF60650000000G000

HABITO

Single-lever swivel sink mixer.

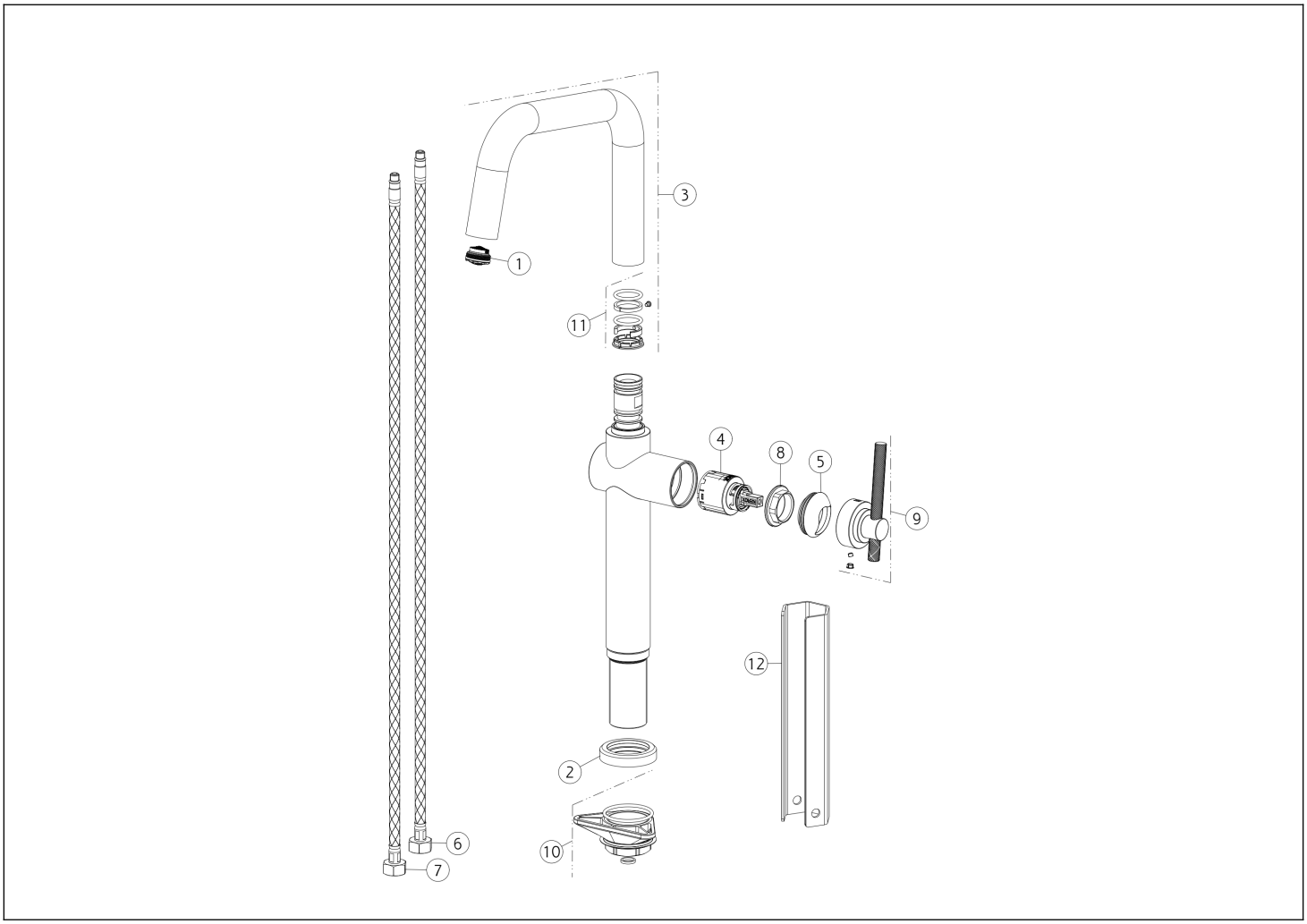

N°	Code	Description
1	SP00499	AERATOR
2	SP04508	BASE
3	SP04506	COMPLETE SPOUT
4	SP00902	CARTRIDGE
5	SP03280	FINISHING RING NUT
6	SP01286	BLU SUPPLY HOSE

N°	Code	Description
7	SP01287	RED SUPPLY HOSE
8	SP00406	FIXING RING NUT
9	SP04507	HANDLE
10	SP00462	FIXING SET
11	SP00909	GASKETS AND ANTI-FRICTION RINGS
12	SP00687	SPECIAL TOOL

Gessi S.p.A. Parco Gessi, 13037 Serravalle Sesia (Vercelli) Italy Tel. +39 0163 454111 Fax. +39 0163 453150 - www.gessi.com - gessi@gessi.it This drawing, as required by law, may not be made public or reproduced without the written authorization of GESSI S.p.A. Copyright GESSI S.p.A.